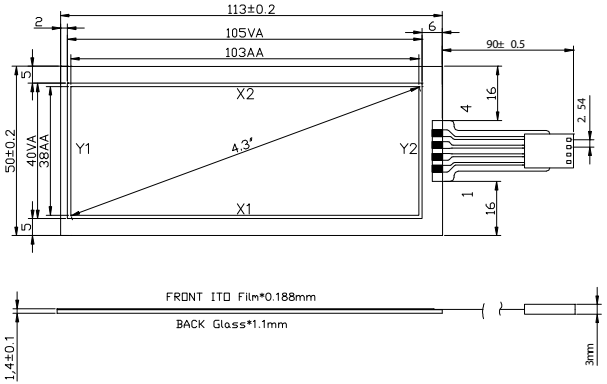

PIN	OUT
1	Y1
2	X1
3	Y2
4	X2

Notes:

1.Type: Film to Glass
2.Operating Voltage: ≤10V
3. Operation Temperature : -10C°～60C°
Storage Temperature : -20C°～70C°
4. Life Time : >1, 000, 000 times
5.Connect Material: FPC
6.Response Time: ≤10ms
7.Linearity: ≤1.5 %
8.Transmittance: ≥85%
9.Surface Hardness ≥3H(pencil)
10. Operation force: 20g～80g
11.Resistance: X : 130Ω ~ 200Ω
Y: 850Ω ~1460Ω

		DRAWN:	DATE:	VERSION:	UNIT:	TOLERANCE:	SCALE:	REV:
Newhaven Display	NHD-TS-12864C-4043003		06/04/08	1.0	MM	±0.2	1:1	

Newhaven Display